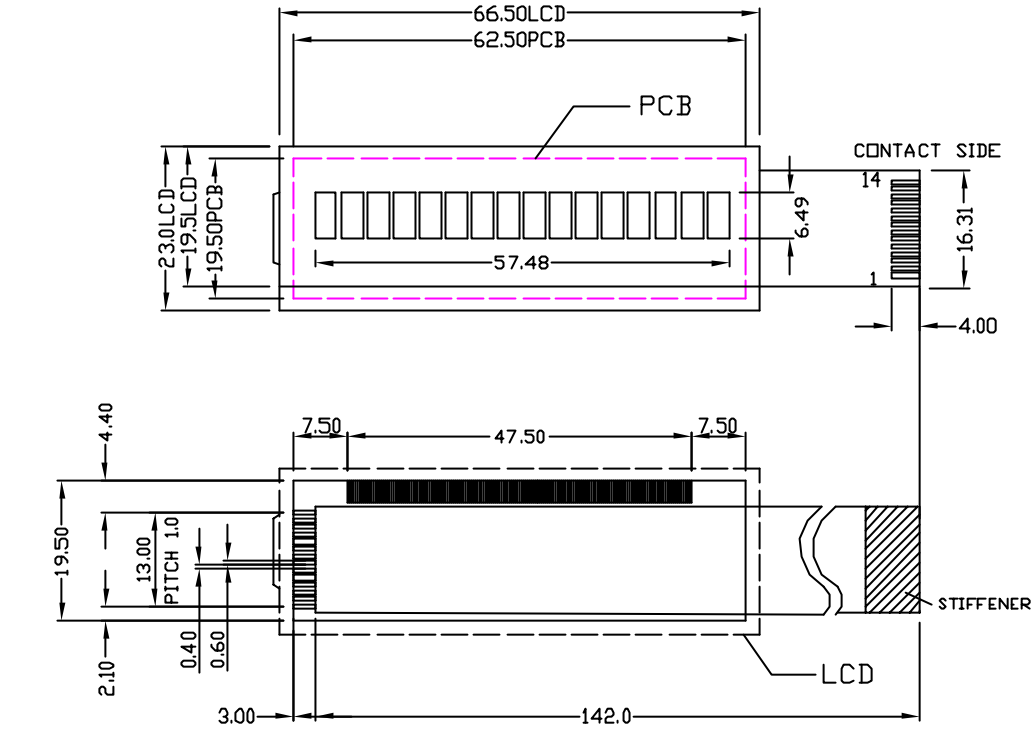

* THE LENGTH OF THE FFC CABLE: 145MM

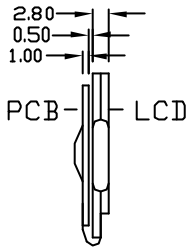

REVISIONS

NO.	DATE	BY	DESCRIPTION
1	03/02/14	A.CH	NEW RELEASE

PINS ASSIGNMENT

NO.	SYSBOL	DESCRIPTION
1	VDD	POWER SUPPLY
2	V0	OPERATING VOLTAGE FOR LCD
3	RS	DATA/INSTRUCTION SELECT
4	R/W	READ/WRITE CONTROL
5	E	ENABLE SIGNAL
6--13	DB0--DB7	DATA BUS
14	VSS	POWER SUPPLY, GROUND

ABSOLUTE MAXIMUM RATING

ITEM	SYMBOL	MIN	MAX	UNIT
POWER SUPPLY(LOGIC)	VDD-VSS	-0.3	7.0	V
POWER SUPPLY(LCD DRIVE)	VDD-V0	-0.3	13.5	V
INPUT VOLTAGE	Vi	-0.3	VDD	V

ELECTRICAL CHARACTERISTICS (VDD=5.0±0.25V, 25C)

ITEM		SYMBOL	MIN	TYP	MAX	UNIT
VOLTAGE FOR LOGIC		VDD-VSS	4.75	5.0	5.25	V
SUPPLY CURRENT		IDD	-	1.3	2.2	mA
VOLTAGE FOR LCD		VDD-V0	-	4.9	-	V
INPUT VOLTAGE	H	VIH	2.2	-	VDD	V
	L	VIL	-0.3	-	0.6	V
OUTPUT VOLTAGE	H	VOH	2.4	-	-	V
	L	VOL	-	-	0.4	V

MECHANICAL SPECIFICATIONS

ITEM	SPECIFICATION	UNIT
OVERALL SIZE	66.5W x 23.0H x 6.5	MM
VIEWING AREA	63.50W x 19.7H	MM
CHARACTERS	16 CHARACTERS x 1 LINES	
CHARACTER SIZE	3.03W x 6.49H	MM
CHARACTER PITCH	3.63W x 6.49H	MM

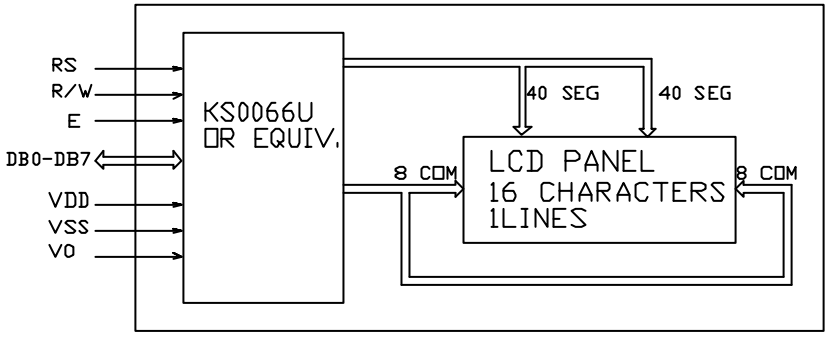

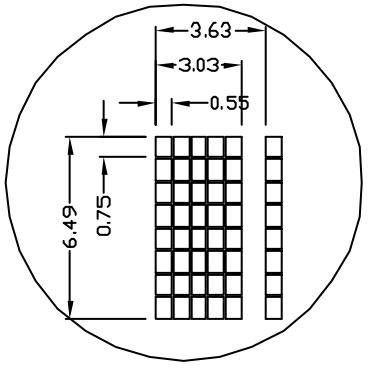

OPTIONS

1. LCD TYPE: HTN, POSITIVE
2. BACKLIGHT: WITHOUT BACKLIGHT
3. CABLE: 145MM FFC
4. TEMPERATURE RANGE: NORMAL(0--50C)
5. POWER SUPPLY: 5.0V;
6. VIEWING ANGLE: 6H;
7. CHARACTER TABLE: ENG/JAN

NT-C1614A

16 CHARACTERS X 1LINES

ALL DIMENSIONS ARE IN MM. TOLERANCE IS +/-0.2 UNLESS OTHERWISE NOTED.